On Data Quality and Availability Modeling of Power Grid Phasor Measurements

Karl Reinhard, *Student Member, IEEE*

***Abstract*—United States 'Smart Grid' initiatives envision very reliable, available synchro-phasor data as a cornerstone for improving electric power grid efficiency and reliability. However through early 2012, power system operators report that synchro-phasor data availability falls short of the levels required to realize the vision. This paper proposes phasor measurement unit (PMU) reliability and synchrophasor data availability models, using reliability block diagrams and Markov chains. These models highlight causes for reduced synchrophasor data availability and suggest approaches for assuring very high synchrophasor data availability.**

I. Introduction

In 2007, the United States Congress enacted the Energy Independence and Security Act (EISA), which mandated modernizing the nation's electric power infrastructure. The law established national policy to support the modernization of the Nation's electricity transmission and distribution system, commonly referred to as the 'Smart Grid,' with emphasis on increasing digital information and control technology applications to improve electric grid reliability, security, and efficiency. [1]

The phasor measurement unit (PMU) is a key enabling technology that records voltage, current, power, and associated phase angles multiple times per 60 hertz electrical cycle and time-stamps the measurements using micro-second (or better) resolution Global Positioning Satellite (GPS) timing signals. These precise time-stamped measurements are essential to synchronizing data from widely-dispersed locations to enable the rapid and accurate calculation of the power system's state [2]. Phasor Measurement Units (PMUs) are envisioned to close the information gap between electric power system events occurring on the ground and being known by power system control centers. PMU data, also known as synchrophasor data, is envisioned to be useful not only for monitoring steady state system performance but also for tracking dynamic system behavior, facilitating timely system control decisions, and validating power system models. Very high integrity PMU data with very high availability rates is foundational to realizing this vision.

The synchrophasor data is passed to phasor data concentrators (PDCs) which receive synchrophasor data from multiple PMUs, assemble data by time stamp, and forward synchronized data either to higher level PDCs or to control centers. Widespread PMU deployment will enable monitoring:

- Phase and power angles
- System oscillations that threaten system stability
- Voltage stability
- Line Thermal conditions

These measurements will increase the fidelity and timeliness of the control center's awareness of the system's actual operating state – especially under stressed conditions [3]. This real/near-real time knowledge will facilitate dynamic system adjustments and enable the post-mortem analysis of significant power system events.

At the North American SynchroPhasor Initiative (NASPI) Working Group Meeting in February 2011, system operators representing the Eastern and Western interconnects provided frank assessments of the synchrophasor data quality that they tracked. The Grid Protection Alliance (Eastern Interconnection) reported that on a typical day in February 2011 only 47 (39 percent) of its more than 130 PMUs provided valid data more than 99 percent of the time; in contrast, 66 (46 percent) reported valid data less than 50 percent of the time. Similarly, the California Independent System Operator (CAISO, Western Interconnection) reported that typically 10 of 56 (18 percent) of the PMUs that it tracks have either failed or are out of synchronization; significantly, the communications network provided 99.5 percent synchrophasor data availability for functioning PMUs. [4]

Given the public's high expectations of very reliable, on-demand electric power, the reported synchrophasor performance clearly falls short of power system operator requirements for trustworthy information from synchrophasor networks. Improving synchrophasor data availability requires an understanding likely weaknesses in PMU reliability and the system that delivers the data

Karl Reinhard, reinhrd2@illinois.edu, is with the Department of Electrical and Computer Engineering at the University of Illinois at Urbana-Champaign

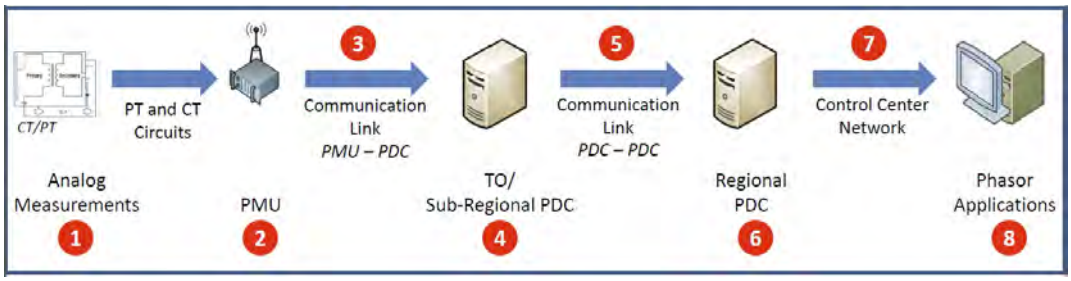

Fig. 1. NASPI Synchrophasor Network Data Flow. Synchrophasor errors can originate at any of 8 points in the data flow. [4]

to the operator. To date, there have been a handful of reported efforts to model PMU reliability.

Wang, et. al. developed a hierarchical Markov model for PMUs that examined in minute detail the contribution of each component to reliability; the final result was a two-state equivalent Markov model. Their analysis pointed to GPS and central processing unit module failure rates as most important to determining PMU reliability. [5] Aminifar, et. al. applied fuzzy set modeling techniques to Markov PMU models to compensate for input data uncertainties used in the reliability model. [6]

The continuing challenge is developing useful models that aid understanding underlying causes of industry reported low synchrophasor data availability and that provide direction to improve data availability and quality. This paper describes a generic PMU and develops a simple hardware reliability model using reliability block diagram concepts. The paper then examines synchrophasor data availability in the context of the synchrophasor network and develops a Markov model characterizing PMU data availability due to a single PMU. The remainder of the paper is organized as follows. Section II provides background on the PMU and the synchrophasor network. Section III is organized in two sub-sections; the first develops a PMU reliability block diagram to model hardware reliability; and the second develops a Markov model for synchrophasor data availability. Section IV proposes methods for improving PMU system performance. Finally, conclusions are presented in Section V.

II. Background on PMUs and the Synchrophasor Data Network

The synchrophasor data network is shown in Fig. 1. The PMU is installed at select power sub-stations where it measures voltage and current and computes current and voltage phasor data. The synchrophasor data is in turn transmitted via a communications network to a hierarchy of phasor data concentrators (PDCs) that integrate time-stamped data from multiple PMUs. Ultimately, region-wide synchrophasor data is assembled at the control center. Synchrophasor data can be lost or corrupted at any of the eight stages in the data flow, indicated by the circled numbers.

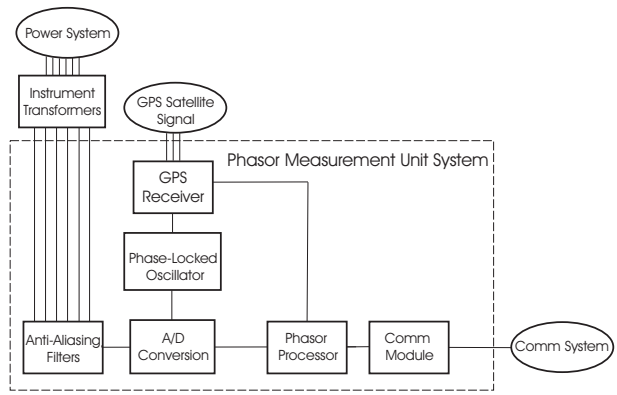

Fig. 2. PMU system model [7].

A PMU's nominal internal components are shown in Fig. 2. The PMU receives analog voltage and current signals through current and power transformers connected directly to the power grid at the substation. The analog signals are conditioned by anti-aliasing filters to remove unnecessary high frequency signal components before digital sampling occurs in the analog to digital (A/D) converter. In parallel, the PMU receives GPS signals that provide precise timing data. The timing data serves as (a) the reference for the phase-locked oscillator that determines sampling times in the A/D converter and (b) the time-stamp for synchrophasor data. The phasor processor computes synchrophasor data from the digitized signal and GPS timing data. The communications module formats the data for transmission and finally injects synchrophasor data into the communications system multiple times per 60 hertz cycle.

The Internet is assumed to be a significant part of the communications system through which synchrophasor data will be predominantly transmitted. The Internet uses complex schemes to compensate for lost data – but those

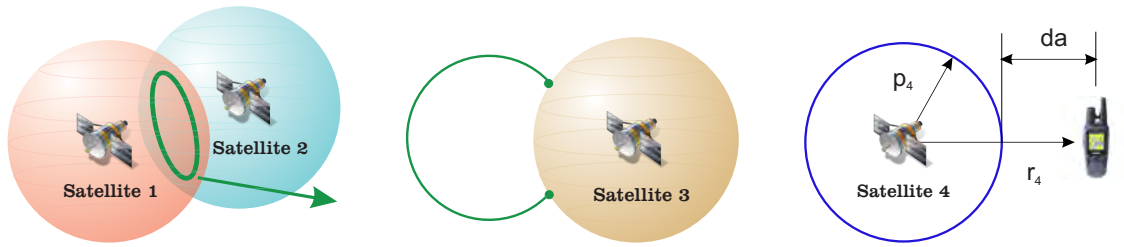

(a) (b) (c)

Fig. 3. Global Positioning System timing signal generation (a) Two satellite signals intersect in a circle (b) The third satellite signal intersects the circle at 2 points (c) The fourth satellite signal enables timing error detection and correction. [8]

processes will delay assembling complete, time-critical synchrophasor data at control centers.

GPS timing data is critical to enabling the comparison of precisely synchronized voltage and current data at locations separated by thousands of miles. The conceptual foundation for generating that data is shown in Fig. 3. At any given time and point on the earth's surface, a GPS receiver will be in view of 6 to 12 satellites; 4 good satellite timing signals are required to generate the GPS timing data. Each satellite transmits timing data that includes i) precise message transmission time, ii) precise orbital information (ephemeris), and iii) general GPS system health and all approximate satellite positions (almanac). As shown in Figs. 3a and 3b respectively, the intersection of 2 satellite signals is a circle, and the third satellite's signal intersects that circle at 2 points. Given that precise time computation includes the speed of light, c, and corrections for relativistic affects, small clock errors can result in timing data outside required error tolerances. The timing signal from the fourth satellite enables the error correction essential to producing the precise timing data. Ideally, the fourth satellite signal would intersect at one of the two points (Fig. 3c); however, the computation normally results in the calculated distance da (the difference between the range, r_4, and the pseudo range, p_4) between calculated and actual receiver locations. Conceptually, the error is calculated using da and c such that

$$e(t) = \frac{da}{c}. \tag{1}$$

The error-corrected time is accurate to approximately 10 nanoseconds. [8]

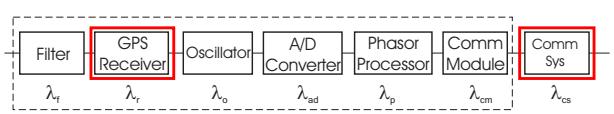

Fig. 4. PMU Network block diagram reliability model.

III. Reliability and Availability Modeling

A. PMU Hardware Reliability Modeling

A reliability block diagram, Fig. 4, is used to model PMU reliability. While the PMU system itself has components connected in both series and parallel, the block diagram has only series connections because the PMU system functions if and only if all of its components are functioning. During an electrical component's useful life, it is common and accurate to model the components with constant failure rates. [9] Assuming that each PMU system component has a constant failure rate, λ, the PMU system failure rate is the sum of the component failure rates.

$$\lambda = \lambda_f + \lambda_r + \lambda_o + \lambda_c + \lambda_p + \lambda_{com} + \lambda_{cs} \tag{2}$$

The PMU reliability function, $R(t)$, the probability that the PMU will provide synchrophasor data (i.e. the hardware will not fail), is given by

$$R(t) = e^{-\lambda t}. \tag{3}$$

The block diagram is useful for conceptually identifying components likely to make the most significant contributions to data not being available. Based upon the electronic circuit state of the art reliabilities, a well designed PMU is expected to have very high reliability rates.

However, previously cited power system operator experience is inconsistent with this expectation. One possible explanation is that the PMU system fails to receive required inputs – either the voltage and current measurements or four GPS satellite signals. The local current and power transformers are likely to have very high reliabilities. However, the reliability of receiving four very low power GPS satellite signals (approximately 10^{-16} watts [10]) every second without interruption, especially in noisy electromagnetic environments, is less certain.

B. Synchor-phasor Data Availability Modeling

A second situation exists when the synchrophasor data system (stages 3 to 8 in Fig. 1.) fails to deliver synchrophasor data to the control center. For near real-time applications, the synchrophasor data network must transmit, receive, and order data very quickly through multiple system layers (PDCs) and communications paths between the point of measurement and the control center. The IEEE Standard for synchrophasors allows either the Transmission Control Protocol (TCP) or the Universal Datagram Protocol (UDP) to be used to transmit synchrophasor data packets. The two protocols provide sharply contrasting reliability, ordering, control, and speed capabilities. TCP is a connection-oriented protocol, which establishes two-way handshake communications between the transmitter and receiver; the connection feature ensures reliability by ensuring messages sent are received and properly ordered – providing very reliable communications at the expense of very fast communications. In contrast, UDP is a connectionless protocol – meaning data is sent without a process for ensuring that it is received or sequentially ordered; communications is fast at the expense of reliability and data integrity. [11]

The PDCs also have an important role assembling and ordering the data for retransmission that will introduce additional delays and errors. The engineering trade-off in selecting the protocol depends upon how quickly the data must be assembled at the control center to be useful. Real-time power system control requires that data be available at the control center in less than a second. At the other extreme, synchrophasor data for post event forensic analysis need not be retrieved for hours or days. In the mid-range, it may be acceptable for synchrophasor data to be assembled in seconds to minutes to depict the power system's state. Thus synchrophasor network and communications system capabilities and limitations can significantly affect data availability.

Thus, the hypothesis advanced and modeled is that unavailable PMU data is primarily attributable to GPS signal or communications systems failure. These failure modes are highlighted as the 'GPS Receiver' and 'Comm Sys' on block reliability diagram.

Markov modeling techniques provide an appealing alternative approach. Since, synchrophasor data is computed at set intervals, a discrete Markov chain is appropriate. For the purpose of modeling data availability, the network can be considered to be self-healing because data not being available is hypothesized to be dependent upon random processes outside the PMU itself rather than upon physical PMU network component failures. Hence, the external conditions affecting data availability are subject to change with each measurement. The candidate Markov model is shown in Fig. 5. This four-state model includes a synchrophasor data available state (1) and three data not available states: GPS signal not available (2), communications system not available (3), and neither being available (4). The transition probability between states i and k at each discrete time step k denoted by q_{ij}. The discrete difference equation is written

$$\begin{bmatrix} \pi_1[k+1] \\ \pi_2[k+1] \\ \pi_3[k+1] \\ \pi_4[k+1] \end{bmatrix} = \begin{bmatrix} q_{11} & q_{12} & q_{13} & 0 \\ q_{21} & q_{22} & 0 & q_{24} \\ q_{31} & 0 & q_{33} & q_{34} \\ 0 & q_{42} & q_{43} & q_{44} \end{bmatrix} \begin{bmatrix} \pi_1[k] \\ \pi_2[k] \\ \pi_3[k] \\ \pi_4[k] \end{bmatrix}, \quad (4)$$

where $\forall i, j,\ q_{i,j} \geq 0$ and $\pi_i[k]$ represents the probability of being in the state i at time k. The transition rate matrix Q is comprised of the transition rates between states, q_{ij}. Also note, that for $\forall j, \sum_j q_{i,j} = 1$. The solution of this discrete time equation is

$$\pi[k+1] = Q^{k+1}\pi[0]. \quad (5)$$

Significantly as the number of iterations becomes very large, Q^k will converge to steady state values, which will determine the long run probabilities of being in a given state. The design objective is to design components and backup mechanisms that assure the desired long run probabilities.

IV. Improving Synchrophasor Data Availability

Proposed approaches to improving data availability are shown in Fig. 6. To address the hypothesized shortfall of the GPS signal being available, a backup clock provides the time stamp, when needed; the backup clock's oscillator must be sufficiently accurate to meet time stamp

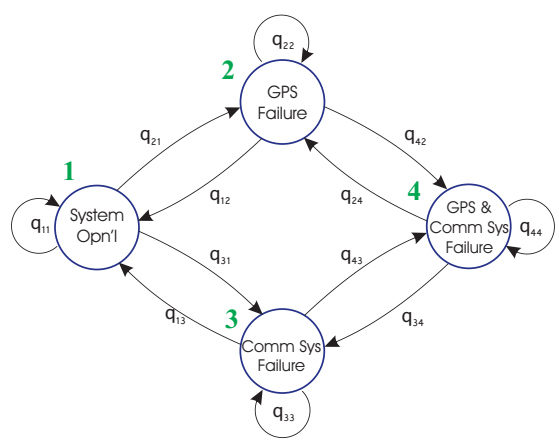

Fig. 5. Markov model for synchrophasor data availability.

accuracy requirements for a specified period. The PMU system must sense GPS timing signal absence and switch the backup clock into operation; similarly, the PMU system must sense and return to normal operation when the GPS timing signal becomes available again. Further, the PMU system must record and report the GPS timing signal absence and backup clock activation.

Addressing absent synchrophasor data due to communications system errors requires that synchrophasor data be stored locally – either by the PMU or by an on-site PDC. When the PMU network recognizes the absence of synchrophasor data for a particular period from a specific PMU, PDCs (or higher echelons to the control center) must be able to query the PMU for absent data. The consequent delay will diminish the recovered data's value for real time power system state awareness and control; however, the data will be available for the post-mortem analysis of any significant system events that might have occurred.

These addition of new PMU components will introduce new states and hence new difference equations. The updated Q will result in a new long-run solution to (5) with the expectation that reliability performance will improve.

V. Conclusions

Synchrophasor data availability clearly can be modeled both with reliability block diagrams and discrete Markov chains. Markov chains are preferred because they provide greater flexibility for modeling system behavior – and consequently greater insight into factors affecting synchrophasor data availability. The anticipated benefit of applying Markov modeling techniques is a rigorous analytical effort to understand raising PMU network performance so that the data is reliably available and viewed as trustworthy. The Markov chain model presented is based upon two hypothesized synchrophasor loss mechanisms – the absence of GPS timing data and the communications system shortfalls. The anticipated follow-on effort is to test the hypotheses using measured synchrophasor data. A second possible line of effort is to develop reliability models that provide insights to improving the synchrophasor data availability as it is passes through intermediate PDCs and the communications system.

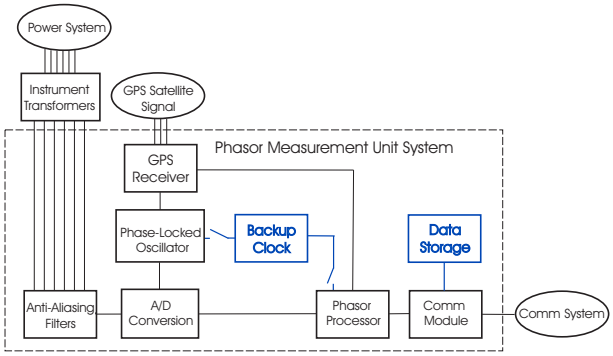

Fig. 6. PMU system model modified to increase synchrophasor data availability.

References

[1] Section 1301, Energy Independence and Security Act (EISA) of 2007 [Public Law 110-140-Dec 19, 2007]. [Online]. Available: http://www.oe.energy.gov/DocumentsandMedia

[2] F. F. Wu, K. Moslehi, and A. Bose, "Power system control centers: Past, present, and future," *Proceedings of the IEEE*, vol. 93, no. 11, pp. 1890–1908, 2005.

[3] K. Moslehi and R. Kumar, "Smart grid - a reliability perspective," in *Proc. Innovative Smart Grid Technologies (ISGT)*, 2005, pp. 1–8.

[4] "Synchro-phasor data quality," February 2011, North American Synchro-Phasor Initiative (NASPI) Working Group Meeting, Fort Work, TX, 24 Feb 2011. [Online]. Available: http://www.naspi.org/meetings/workgroup/2011_February /presentations/techpanel/tech_panel_data_quality _20110224.pdf

[5] W. L. Y. Wang and J. Lu, "Reliability analysis of phasor measurement unit using hierarchical markov modeling," *Electric Power Components and Systems*, vol. 37, no. 5, pp. 517 – 532, May 2009.

[6] F. Aminifar, S. Bagheri-Shouraki, M. Fotuhi-Firuzabad, and M. Shahidehpour, "Reliability modeling of pmus using fuzzy sets," vol. 25, no. 4, pp. 2384–2391, 2010.

[7] A. P. J. Thorp, *Synchronized Phasor Measurements and Their Applications*. Springer Science+Business Media, LLC, 2008.

[8] Global Positioning System. http://en.wikipedia.org/wiki/Gps. Accessed 14 May 2011. [Online]. Available: http://en.wikipedia.org/wiki/Gps

[9] M. Rausand and A. Hoyland, *System Reliability Theory: Models, Statistical Methods, and Applications*, second edition ed., ser. Wiley Series in Probability and Statistics. Wiley-Interscience, 2004.

[10] J. S. Warner and R. G. Johnston, "GPS spoofing countermeasures," *Homeland Security Journal*, 2003. [Online]. Available: http://library.lanl.gov/cgi-bin/getfile?00852243.pdf

[11] Comparison of UDP and TCP. http://en.wikipedia.org/wiki/User_Datagram_Protocol. Accessed 14 Jun 2011.